omega

Instruction Manual for Electric Ovens

OO655X
OO656X
OO657X
OO686X
OO687X

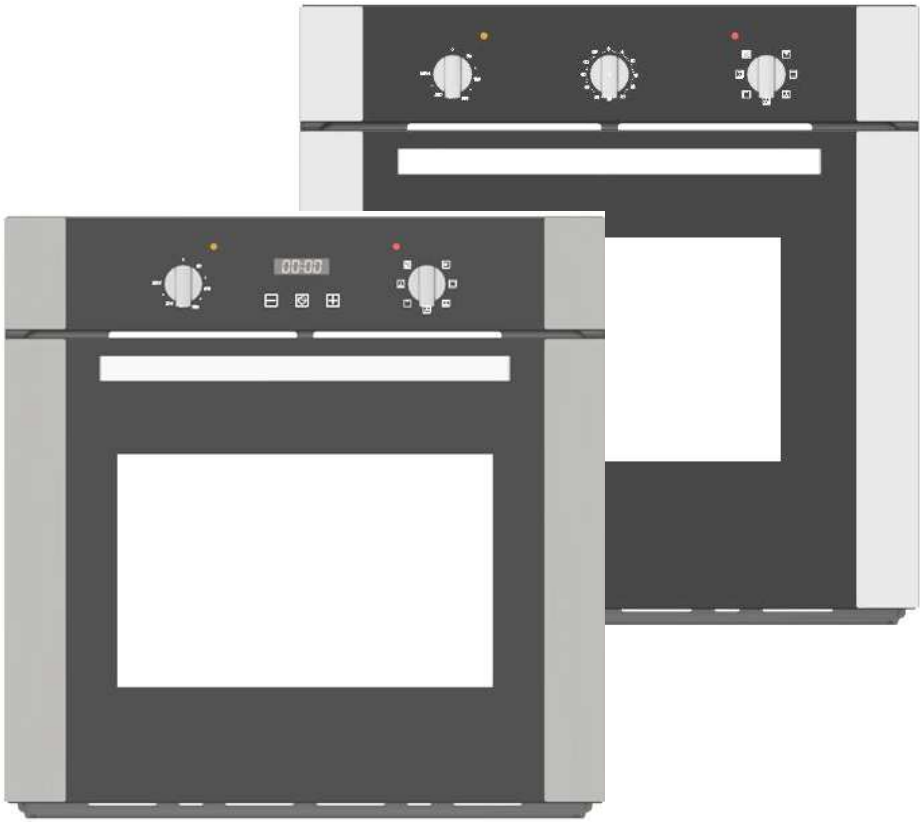

DEAR CUSTOMER,

We thank you and congratulate you on your choice.

This new carefully designed product, manufactured with the highest quality materials, has been carefully tested to satisfy all your cooking demands.

We would therefore request you to read and follow these easy instructions, which will allow you to obtain excellent results right from the start.

TABLE OF CONTENTS

Safety Instruction.....4

Installation of Your Oven.....6

Electrical Installation.....7

INSTRUCTIONS FOR USE.....

Oven Racks.....8

Cooking Functions.....9

Electronic Control.....10

Timer…….....12

Error Code Table…….....15

Oven Door Removal.....16

Replacement of Oven Light.....17

Guidance Temperature and Time Schedule for Cooking……..18

SAFETY INSTRUCTIONS

⚠Important

- When you receive the appliance, unpack it or have it unpacked immediately.

Give it an overall inspection. Make note of any concerns or reservations on the delivery slip and make sure to keep a copy of this form. Keep this user guide with your appliance.

If the appliance is ever sold or transferred to another person, ensure that the new owner receives the user guide. Please become familiar with these recommendations before installing and using your oven. They were written for your safety and the safety of others.

WARNING:

- The Appliance is not intended for use by persons (including Children) with reduced physical, sensory or mental capabilities, or lack of experience and knowledge, unless they have been given supervised instruction concerning use of the appliance by a responsible person for their safety.

- Cleaning and maintenance operations must not be carried out by children without supervision.

- Children must be supervised to prevent them from playing with the appliance.

WARNING:

- During use the appliance becomes hot. Care should be taken to avoid touching heating elements inside the oven.

- Accessible parts will become hot when in use. To avoid burns and scalds, young children should be kept away.

Use

- Before using your oven for the first time, heat it while empty for approximately 15 minutes.

You should ensure you heat each element in the oven before use. Make sure that the room is sufficiently ventilated. You may notice a particular odour, or a small release of smoke. All of this is normal.

Your appliance is intended for standard household use. Do not use it for commercial or industrial purposes or for any other purpose than that for which it was designed.

This oven was designed for use by private individuals in their homes. It is intended solely for cooking foodstuffs.

This oven does not contain any asbestos-based components.

- Do not modify or attempt to modify any of the characteristics of this appliance. This would be dangerous to your safety.

- Never pull your appliance by the door handle.

- When placing dishes inside or removing them from the oven, do not place your hands close to the upper heating elements and use heat-protective kitchen gloves.

- At the end of cooking, do not pick up oven or grill items (grid) with your bare hands.

- Never place aluminium foil directly in contact with the floor of the oven, as accumulated heat may cause deterioration of the enamel.

- Do not place heavy weights on the open oven door, and make sure that children are able neither to climb nor sit on it.

- Do not use your oven as a larder or to store any items after use.

- After using your oven, make sure that all the controls are in their stop position.

- In addition to the accessories supplied with your oven, only use dishes capable of withstanding high temperatures.

Maintenance and cleaning

- Do not use a steam cleaner.

- For any cleaning operation inside the oven cavity, the oven must be switched off.

- Before unclipping the glass, allow the appliance to cool.

- Before removing the back, ensure that the appliance is powered down. After cleaning, the back should be replaced in accordance.

- Do not use harsh abrasive cleaners or sharp metal scrapers to clean the oven glass door since they can scratch the surface, which may result in shattering of the glass.

- To clean both the electronic programmer window and the oven door, use a soft cloth.

- Do not use cleaning products, abrasive creams, or scouring sponges.

Warning :

- Make sure the appliance is disconnected from the power before replacing the lamp in order to avoid the risk of electric shock.

- Change the lamp only when the appliance has cooled down. To unscrew the view port and the light, use a rubber glove, which will make disassembly easier.

Warning :

- Installation should only be performed by qualified installers and technicians.

Warning :

If the electrical supply is restricted, means of all-pole disconnection must be accessible and incorporated in the fixed wiring in accordance with the wiring rules.

If the power cable is damaged, it should be replaced by the manufacturer, its after-sales service department or by a similarly qualified person in order to avoid danger.

PACKAGING

- This appliance's packing materials are recyclable. Recycle them by depositing them in local authority containers provided for this purpose.

- Your appliance also contains many recyclable materials. It is therefore marked with this logo to indicate that used appliances must not be mixed with other waste.

INSTALLATION OF YOUR OVEN

To install the oven into the kitchen a cut out should be made in accordance with the dimensions shown in below.

The apparatus is to be fastened to the top by means of the two screws provided in the kit through the holes made on the oven uprights.

The cabinet in which the apparatus is installed shall be open on the back side to ensure a sufficient air circulation and prevent overheating.

Leave a gap of at least 20 cm^2 for air circulation if the oven is installed in a column; this is not necessary if the oven is installed under the work top.

WARNING

As the apparatus is to be fitted in your kitchen furniture, make sure that all surfaces in contact with the oven can resist a temperature of approx 90°C.

Option 1

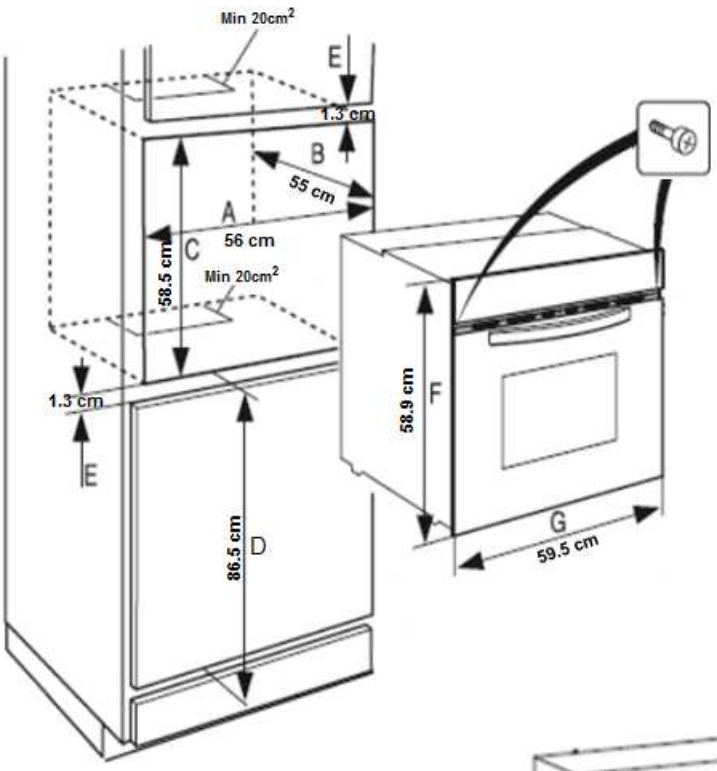

Min 20cm² for air circulation

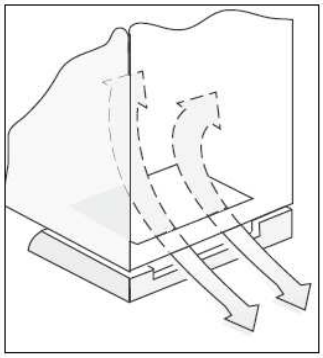

Option 2

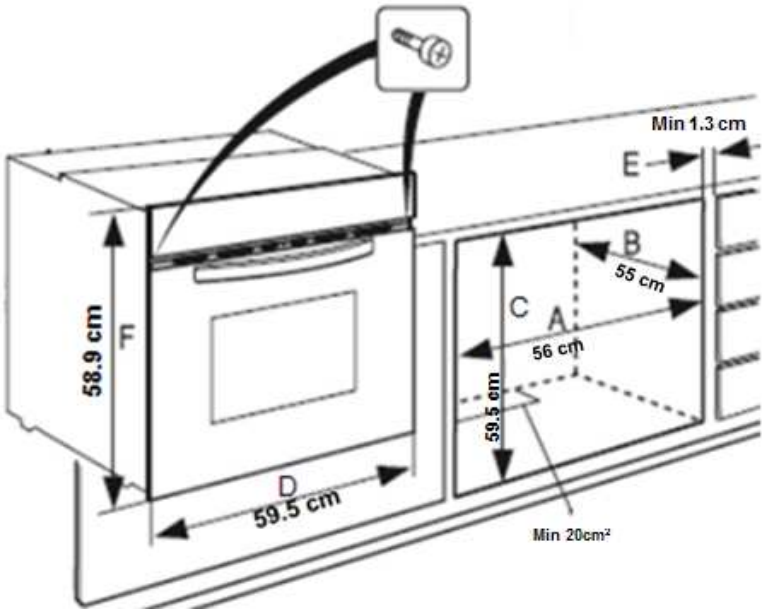

ELECTRICAL INSTALLATION

WARNING

This apparatus must be earthed.

The oven is only for domestic use.

The feed voltage and the absorbed power are as indicated on the data plate attached to the left-hand side upright, which can be seen when the oven door is open.

Connecting must be carried out by qualified personnel and in accordance with the regulations currently in force.

The manufacturer cannot be held responsible for any damages to persons or objects caused by failure to observe these instructions.

If the supply cord is damaged, it must be replaced by the manufacturer, its service agent or similarly qualified persons in order to avoid a hazard.

The oven must be connected to the mains through a multipole circuit breaker with a contact-to-contact gap of at least 3 mm, making sure that the earth wire is not disconnected.

For connecting use a flexible cable of the **H05V2V2-F 3x1,5 mm2** type remembering to make it long enough to allow the oven to be removed from its housing unit when maintenance work is required.

To connect the cable to the oven, proceed as follows (see Fig. 2):

- Remove the lid (1) by unfastening the three screws (2).

- Unfasten the two screws (3) for the cable holder and feed the cable through the opening immediately below the cover.

- Remove about 12 cm of the outside insulation from the cable and shorten the two active wires (live and neutral) to 6 cm, leaving long the one to be connected to the main earth terminal on the terminal box; remove about 1 cm of the main insulation from the three wires and connect them correctly to the terminal box, Remembering to respect the polarities.

- Tighten the two screws (3) of the cable holder and put the lid (1) back on with the three screws (2).

Electricals Specification

- **Absorbed power:**

Oven top element:	2000+1000 W
Oven bottom element:	1200+400 W
Lamp:	25 W
Hot air fan motor:	25 W
Cooling fan motor:	25 W

- **Maximum absorbed power:** (see data plate).

- **Supply voltage:** (see data plate).

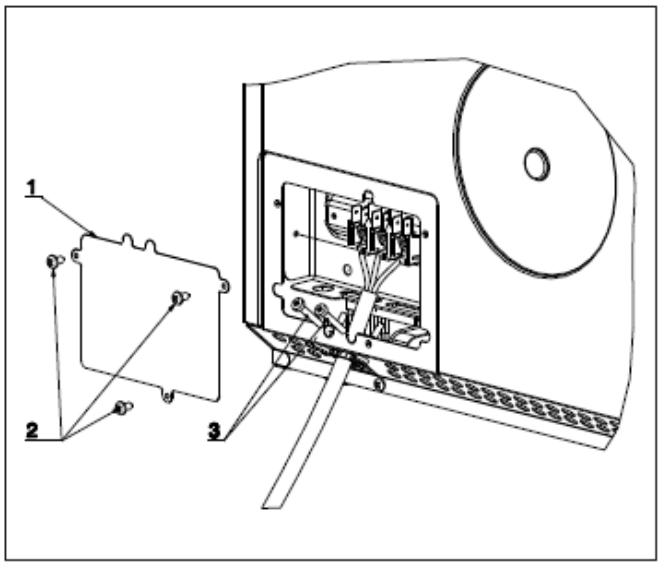

Fig. 2

Oven Racks (OO656X,OO657X,OO686X,OO687X)

There are 9 oven rack positions available within the oven.
This allows food to be positioned at various levels for even cooking.
(OO655X has 5 oven rack positions)

The racks can easily be removed to allow you to clean the oven cavity.

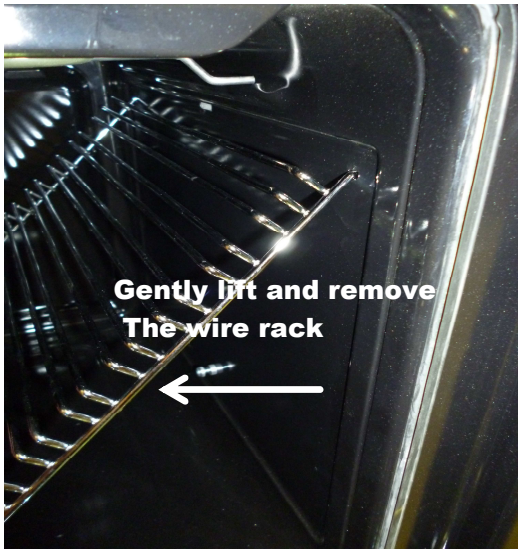

Cooking Functions

Each type of oven is provided for various cooking systems. A system can be selected by bringing the pointer of knob to the relating symbol.

(OO655X, OO656X,OO657X,OO686X)

MODE	NAME	
0	Zero	5 FUNCTION
	Light	
	Fan	
	Fan Forced	
	Grill	
	Fan Grill	

(OO687X)

MODE	NAME	
0	Zero	7 FUNCTION
	Light	
	Top and bottom elements/Traditional /Conventional	
	Traditional with fan (Fan assist)	
	Conventional Fan with lower element	
	Grill	
	Fan Grill	
	Fan Forced	

Electronic Control

Control Panel Description

(Models: OO686X, OO687X)

The oven control panel is made with one display and two knobs.

- Time & Temperature display.
- Time & Temperature knob (Push & Shuttle).
- Mode (oven functions) knob.

The push & shuttle knob is mainly for clock or temperature setting and automatic time functions programming. Select the desired item by pushing the knob.

Programming time functions

At every power-up, the control shows the time of day blinking, set at 12:00 as the initial value. The time increases every minute. The only possible action is the “Clock Regulation”, all other oven operations are inhibited.

In general, turn the Temp/Time selector left or right in order to edit the values and modify them by steps; hold the knob on the left or right to fasten the decrease/increase operations.

Setting the time of day

Fig.1

“Auto” and “0:00” will start flashing when the unit is switched on for the first time. To set the clock, press the central button for about 3 seconds. When appears, press “+” or “-“ to set the correct time.
Wait until a beep tells you that the clock has been set (fig. 1).
To set the time at a later stage, press “+” and “-” together for 3 seconds and then adjust the clock as described above.

Minute counter

Fig.2

As this minute counter does not control the oven, when it finishes counting the oven will continue to work.
To set, press the central button for 3 seconds until appears (fig. 2). Press “+” and “-” to set the required time.
The minute counter beeps when it finishes counting. To disable it, press any button.
To cancel the minute counter press the ‘-‘ button until the timer displays 0:00.

Cooking time

Fig. 3

This is a semi-automatic cooking function. It can be used to set cooking times. This function automatically switches the oven off after the duration is complete.
Firstly your cooking mode and temperature should be set.

Press the central button for 3 seconds. Then press it again until “dur” appears (fig. 3). Press “+” and “-” to set the required cooking timer.

The oven will work in the set mode and at the set temperature until the end of cooking time.
To cancel the cooking duration press the ‘-‘ button until the timer displays 0:00.

The end of cooking time

Fig. 4

The end of cooking time can also be set. This works as part of a programmed time.
Press the central button for 3 seconds. Press the central button twice consecutively and wait for “End” to appear (fig. 4). Press “+” and “-” to set the required end of cooking time.
The oven will work in the set mode and at the set temperature until the end of cooking time.

Setting Programming automatic cooking

Fig. 5

Cooking function with set times
Firstly your cooking mode and temperature should be set.
Press the central button for 3 seconds. Then press it again until “dur” appears (Fig.5). Press “+” and “-” to set the required cooking time. Wait 2 seconds for the setting to be memorized.
Press the central button again, “End” will appear (fig. 4). Press “+” and “-” to set the required end of cooking time.
The oven will switch off and the word AUTO will appear in the display.
E.g.:
Current time: 12.30
Cooking time: 10 minutes
End of cooking time: 14.00
The oven will start cooking at 13.50 (14.00 less 00.10) at the set temperature and in the set mode and will stop at 14.00
The oven will beep when it stops cooking. To disable it, press any button.

Adjusting beep volume

To adjust beep volume, press “+” and “-” together. Then press the central button and wait for “ton1” (high volume) to flash. Press “-” to select “ton2” (medium volume) or “ton3” (low volume).
Press the central button to set the selected volume.

INSTRUCTIONS FOR USE Cont.

Alarm Timer

You can set this timer to sound a buzzer after 0 to 60 minutes of cooking. First turn the knob fully clockwise, then turn it back to the desired alarm time

Setting the minute minder (Models: OO656X, OO657X)

When the symbol is displayed, turn the knob left/right in order to set the timer value. The standard value is 30 minutes, it’s possible to modify it in the range between 0 and 60 minutes.

This timer has no influence on the oven activities and can be set also when the oven is off. The time of day is displayed with priority in any case, the symbol shows the minute minder is active.

When the time expires, the symbol flashes and the buzzer sounds a warning sequence (two short beeps repeated every 3 seconds) to recall the user attention. Push the knob to stop it. The buzzer stops in any case after a time-out.

Alarm Timer

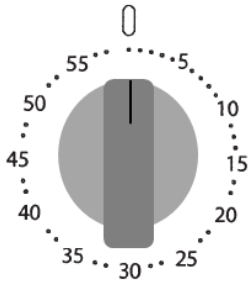

Minute Minder

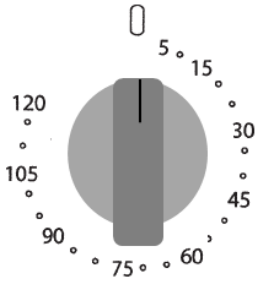

Setting an oven function manually

Turn the mode knob into the desired position, the clock display shows ***On*** for a few seconds. The oven will work for a maximum time (12hours). Depending on the oven model, the number and type of available functions can be different.

If the selected function works using any heating elements, the symbol is displayed (it doesn’t appear in light and defrost position).

Turn the Temp & Time selector and set the desired oven temperature.

The control offers a PRESET temperature per every cooking mode or a full range between MIN and MAX to be adjusted by hand. Check the value on the display after having selected the temperature.

The temperature appears on the clock display for about 5 seconds when the Time & Temp selector is pushed or when a new function has just been selected.

As soon as the oven starts, the preheat led (indicated by the bars) on the left side of the clock display starts flashing and becomes steadily on when the preheat ends.

Turn the mode selector to ZERO (OFF) position to stop any activity, the display will show ***OFF*** for a few seconds.

Setting an automatic oven function

After having selected a function as described before, the control can be programmed in order to set timed cooking activities. The time program remains active even if the function is changed .The following possibilities are available:

1. Timed cooking setting the cooking time (duration).

2. Timed cooking setting the end of cooking time (stop time).

3. Delayed cooking setting duration and stop time. Push the knob in order to toggle between cooking duration (cook time) and end of cooking time (stop time): the words “dur” or “End” are displayed respectively. Turn the knob left/right to edit the duration or the stop time when the proper word is displayed.

INSTRUCTIONS FOR USE Cont.

4. When the word ***dur*** is displayed, the control shows ***30’*** as the standard cooking duration.

Turn the knob left/right in order to set the actually desired cooking time in a range between 0 and 240 Minutes. The display will flash ***dur*** and its value alternatively for a few seconds then it will show the time of day, the pot symbol and the letter to indicate that a timed cooking is active. The end of cooking time is updated automatically.

5. When the word End is displayed, the control shows the current time as the initial stop time. In order to set the actually desired end of cooking time in a 24 hours range:

- Turn the knob left/right, the hours flash.

- Modify the flashing hours value turning the knob left/right.

- Push the knob to switch back and forth between hours and minutes or wait a few seconds until the minutes flash.

- Modify the flashing minutes value the knob left/right.

- Wait until the new End of Cooking time value stops flashing.

The display will flash End and its value alternatively for a few seconds then it will show the time of day, the symbol and the letter to indicate that a timed cooking is active. The cooking duration is updated automatically.

3. Repeat the same operations of point 1 then push the knob until End appears. The control shows the “current time + cooking time” as the initial stop time. It’s not possible to lower the end of cooking time below this value. In order to set the actually desired end of cooking time in a 24 hours range:

- Turn the knob left/right, the hours flash.

- Modify the flashing hours value turning the knob left/right.

- Push the knob to switch back and forth between hours and minutes or wait a few seconds until the minutes flash.

- Modify the flashing minute’s value turning the knob left/right.

- Wait until the new End of Cooking time value stops flashing.

The display will flash End and its value alternatively for a few seconds then it will show the time of day and the letter to indicate that a delayed cooking has been programmed. As soon as the delay time expires, the oven starts and works for the programmed cooking time. The symbol is displayed.

At the end of any timed activity the control shuts down the oven, the buzzer sounds a warning sequence (two short beeps repeated every 3 seconds) to recall the user attention, for a maximum time and makes the time related icons (,) flash on the display. Push the knob to silent the buzzer and reset the warning message.

Turn the mode selector to ZERO (OFF) position before reusing the oven.

Oven functions

The control can manage many cooking functions, here below described, their number and availability depends on the oven model. The temperature range is between 50°C and 250°C for most functions.

Preset temperatures are mainly 190°C for convection modes, 210°C for thermal modes and 230°C for grilling functions.

INSTRUCTIONS FOR USE Cont.

Defrost

This function is used to defrost frozen food in a short time. It doesn't heat up the oven, only the convection fan works. The temperature display shows ***dEF*** to indicate that this special mode is active.

Child Lock

Hold the Time & Temp knob for about 3 seconds to lock the control panel commands and prevent children from turning on the oven freely. Both knobs are disabled.

Failure declarations and error codes

The control is continuously checking the status of the system. If an abnormal condition is detected for more than 1 minute, a failure occurs:

- The heaters and the other loads are disabled.
- The display shows a "E" letter followed by a numeric code that depends on the kind of failure.
- The control emits an acoustic warning signal.

To reset a failure declaration, first remove the cause of the failure then turn the selector to (ZERO) OFF.

Error code table

Error	Description
E1	Temperature sensor broken.
E2	Temperature sensor shorted.
E4	Temperature sensor circuit failure.
E8	Latch time-out overflow.
E16	Free.
E32	Free.
E64	Mode selector disconnected. Cannot be reset.
OTHER	Sum of error codes simultaneously detected.

Oven door removal

WARNING

Make sure that:

• The oven is cool and power to the oven has been turned off before removing the door. Failure to do so could result in electrical shock or burns.

• The oven door is heavy and fragile. Use both hands to remove the oven door. The door front is Glass. Handle care-fully to avoid breakage.

• Grasp only the sides of the oven door. Do not grasp the handle as it may swing in your hand and cause damage or injury.

• Failure to grasp the oven door firmly and properly could result in personal injury or product damage.

To **remove the oven door** (see Fig. 10):

1. Open the door completely.
2. Lift up the hinge bracket (1) into the slot (2).
3. Hold the door firmly on both sides using both hands and close the door.
4. Hold firmly; the door is heavy.
5. Place the door in a convenient location.

To **replace the oven door** (see Fig. 10):

1. Insert the upper arms (3) of both hinges into the upper slots (6) and the lower arms (4) into the lower slots (7). The recesses (5) must hook on the lips (8).
2. Move the hinge brackets (1) back down into position.
3. Close and open the door slowly to assure that it is correctly and securely in place.

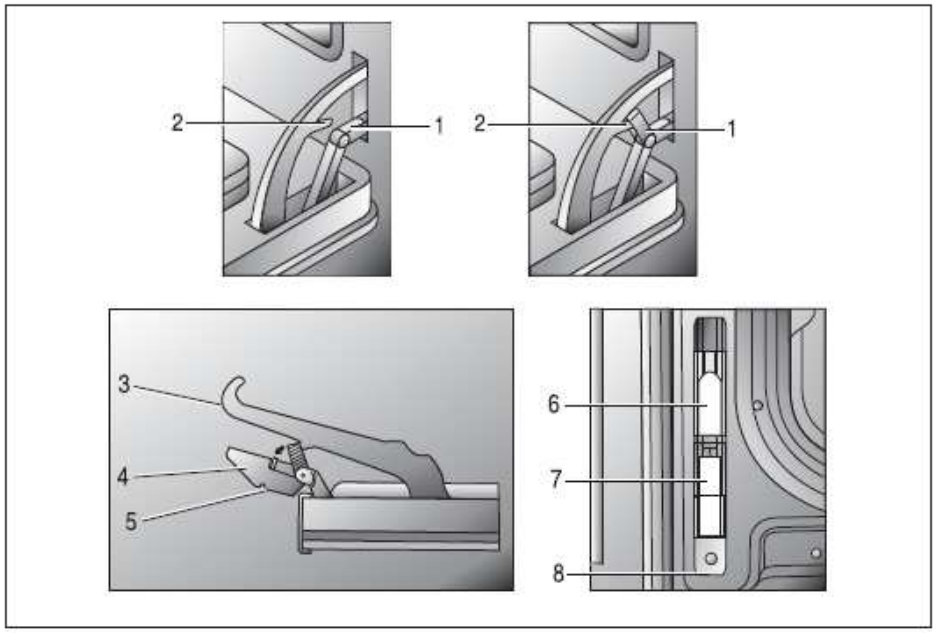

Fig. 10

Replacement of the oven light

WARNING

Make sure that:

• The oven and lights are cool and power to the oven has been turned off before replacing the light bulb(s). Failure to do so could result in electrical shock or burns.

• The lenses must be in place when using the oven.

• The lenses serve to protect the light bulb from breaking.

• The lenses are made of glass. Handle carefully to avoid breakage. Broken glass could cause an injury.

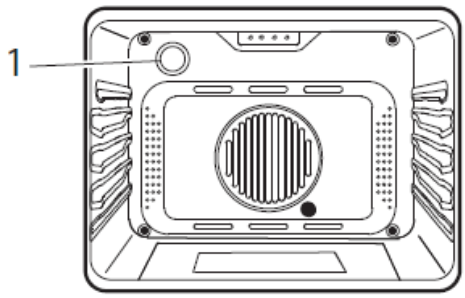

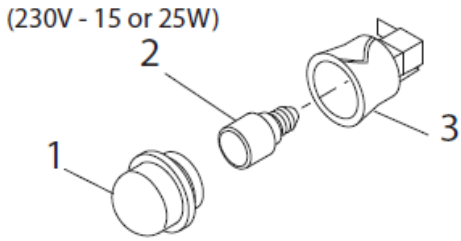

Fig. 11

1. Turn off power at the main power supply (fuse or breaker box).
2. Remove the lens (1) by unscrewing it.
3. Remove the light bulb (2) from its socket (3).
4. Replace the bulb (2) with a new one. Avoid touching the bulb with fingers, as oils from hands can damage the bulb when it becomes hot.
5. Use one with the same Volt and Watt (see Fig. 11).
6. Screw the lens (1) back on.
7. Turn power back on at the main power supply (fuse or breaker box).

GUIDANCE TEMPERATURE AN TIME SCHEDULE FOR COOKING

FOOD	Mode	Rack position (from the bottom)	Traditional cooking system		Hot-air cooking system	
			Temperature °C	Cooking time in minutes	Temperature °C	Cooking time in minutes
Poork,calf (roast) etc.		2nd	200 ÷ 225	100 ÷ 150	175 ÷ 180	90 ÷ 120
Filett, Roastbeef		2nd	240 ÷ 250	40 ÷ 50	210 ÷ 225	20 ÷ 30
Poultry (goose, duck, turkey, chicken) whole (4)		1st	190 ÷ 240	150 ÷ 180	180 ÷ 225	60 ÷ 75
Chicken		2nd	225 ÷ 250	30 ÷ 45	210 ÷ 225	45 ÷ 60
Hamburger,Chops of Lamb, Chicken thighs		3th	200 ÷ 220	10 ÷ 20 for each side	180 ÷ 190	10 ÷ 15 for each side
Game (4)		1st	210 ÷ 230	80 ÷ 100	250	45 ÷ 60
Fish		1st	180 ÷ 190	35 ÷ 45	175 ÷ 180	35 ÷ 45
Cakes		1st	170 ÷ 200	40÷ 80	150 ÷ 170	35 ÷ 70
Biscuits		2nd	225	10 ÷ 20	170 ÷ 180	10 ÷ 15
Pizza		2nd	210 ÷ 240	15÷ 20	200 ÷ 210	10 ÷ 12
Pizza Multilevel		2nd & 3th or 2nd & 4th			200 ÷ 210	15 ÷ 20

Warning for hot-air cooking - Position of pans:

- For cooking on 1 plane make use on 2nd holder from the bottom
- For cooking on 2 planes make use of 2nd - 4th holders from the bottom
- For cooking on 3 planes make use of 2nd - 3th and 4th holders from the bottom
- (4) The time depends of poultry dimension, (40 ÷ 45 mins for kg).

IMPORTANT: The cooking times are considered with oven preheated.

We appreciate your feedback.
Please review our products on
www.omegaappliances.com.au